Assembly Instructions

MaxiPlus Microfiber Cart

The guide on the following page(s) was provided by the supplier. New Pig Corporation assumes no responsibility, obligation, or liability in conjunction with the use or misuse of the information.

New Pig
One Pork Avenue
Tipton, PA 16684-0304

newpig.com
North America: **1-800-468-4647**
Europe: **+31 (0)76 596 92 50**
China: **+86-21-400 921 5178**
UK: **0800 919 900**
Outside North America: **+1-814-684-0101**

PIG, PIG logo are registered trademarks in USA and other countries. See tm.newpig.com

366616

Cart Installation Instructions

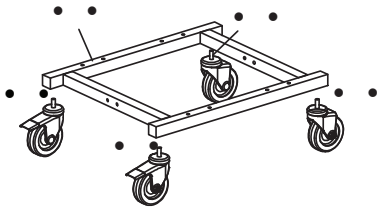

Step One:
Install two casters with brakes(#1)into the bottom frame(#3).Then install the other two casters(#2)into the bottom frame(#3).

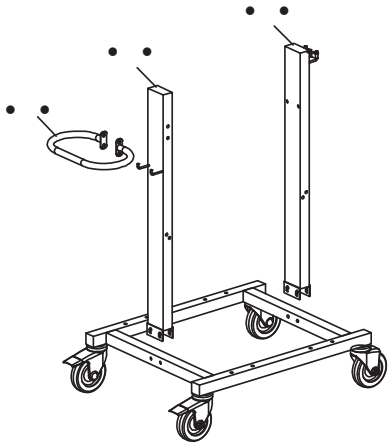

Step Two:
Connect handle(#4)to the cylinders(#5) with screws.Then install both cylinders(#5 & #6) to the frame(#3) with screws.NOTE: #5 cylinder must be on the side of the casters with brakes.#5 cylinder has lower hooks and #6 has higher hooks.

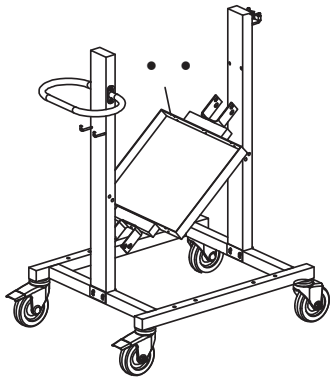

Step Three:
Install the middle tray (#7) between the cylinders(#5 & #6) on the frame(#3). Support the bottom of the tray(#7) to get screws in level.Note:Tray #7 is smaller and square.

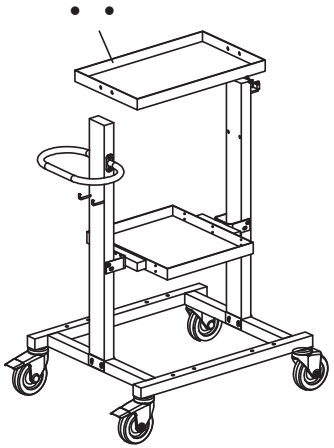

Step Four:
Install the top metal tray(#8) between the cylinders (#5 & #6) on the frame(#3). Support the bottom of the tray(#8) to get screws in level.

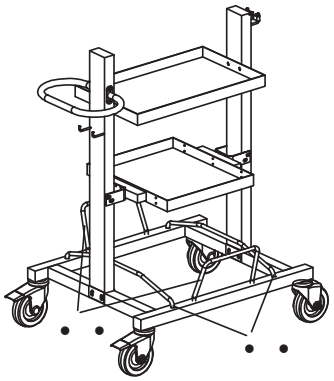

Step Five:
Put the metars bars (#9 & #10) on the top of the bottom frame (#3), angled outwards.Check that all screws are screwed in properly and finish the installation process.

ITEM#	DETAIL PIC	QTY	ITEM#	DETAIL PIC	QTY
• •		2	• •		1
• •		2	• •		1
• •	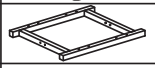	1	• •	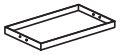	1
• •		1	• •	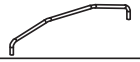	2
• •		1	• •		2